antenna conceptor

Product Datasheet

2J6703B

2.4/5.0 GHz ISM and GPS Screw Mount



Key Features

Cable 1: 2.4/5.0 GHz ISM
- 2410-2490 MHz
- 4920-5925 MHz

Cable 2: GPS/QZSS/Galileo
- 1575 MHZ

Screw Mount
Anti-Rotation Mechanism
Ground Plane Independent
Customizable Cable and Connector
Certificates: IP67, IP69K,
IK09 and IK10 version possible
Dimensions 77.3 x 37.8 mm

1. Antenna and electrical specifications

Cable 1

Parameters	2.4/5.0 GHz ISM Antenna	
Standards	WiFi, BT, ZigBee, ISM	
Band (MHz)	2.4 GHz	5.0 GHz
Frequency (MHz)	2410-2490	4920-5925
Return Loss (dB)	~-20	~-15
VSWR	~1.2:1	~1.4:1
Efficiency (%)	~35	~33
Peak Gain (dBi)	~4.3	~1.8
Average Gain (dB)	~-4.4	~-4.8
Impendance (Ohm)	50	
Polarisation	Linear	
Radiation Pattern	Omni-Directional	
Max. Input Power (W)	25	
Connector Type	Most RF Connectors (SMA-Male Standard)	
Cable Length	Any Cable Length (300 cm Standard)	
Cable Type	Other Cables Available (RG174 Standard)	

Cable 2

Parameters	GPS Antenna
Standard	GPS/QZSS/Galileo
Band (MHz)	1575
Frequency(MHz)	1575.42
Return Loss (dB)	<-20.8dB
VSWR	<1.2:1dB
Impedance	50
Radiation Pattern	Hemispherical
Polarization	RHCP
Saw Filter	
Active Gain (dB)	26 @ 3 V
Noise Figure (dB)	1.2
Voltage (V)	3 – 5
Current (mA)	15 - 25
Power Consumption (mW)	45 - 125
Connector Type	Most RF Connectors (SMA-Male Standard)
Cable Length	Any Cable Length (300 cm Standard)
Cable Type	Other Cables Available (RG174 Standard)

Antenna Measurement Conditions:

Mounted on 30 x 30 cm Ground Plane

200 cm RG174 Cable

Measured in Certified CTIA 3D Anechoic Chamber

2. Mechanical and environmental specifications

Specifications	2J6703B
Mounting Type	Screw Mount
Dimensions (mm)	77.3 x 37.8
Max. Tighten Torque (Nm)	6 Nm
Radome	PC/ABS UV Stable
Radome color	Black
Antenna Base	Zamak
Gasket	TPE
Operating Temperature (C)	-40 to +85
Storage Temperature (C)	-40 to +85
Substance Compliance	RoHS
Certificates	IP67, IP69K. IK09 and IK10 version possible with different material

3. Antenna parameters

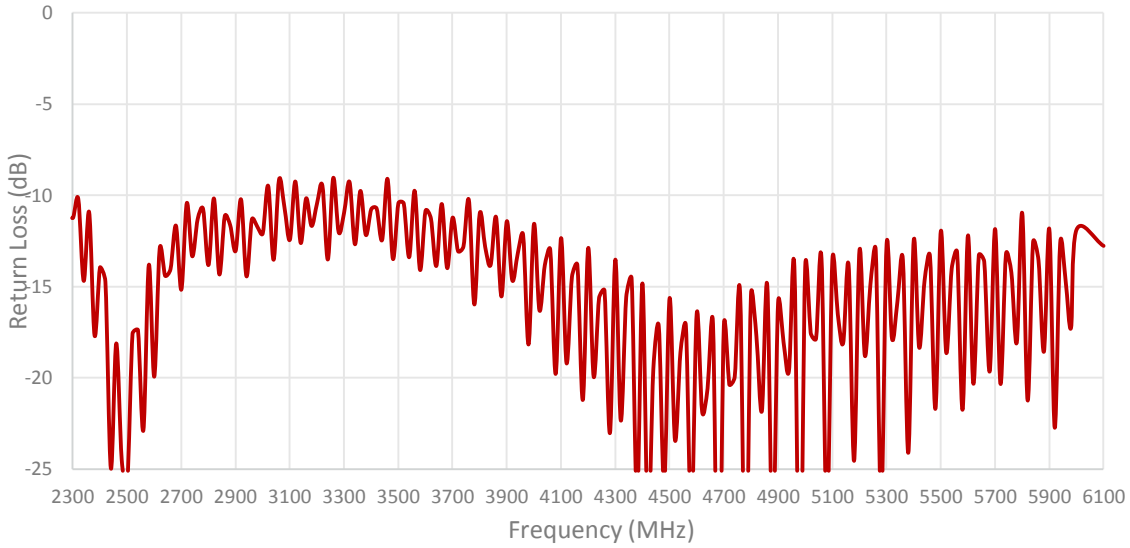

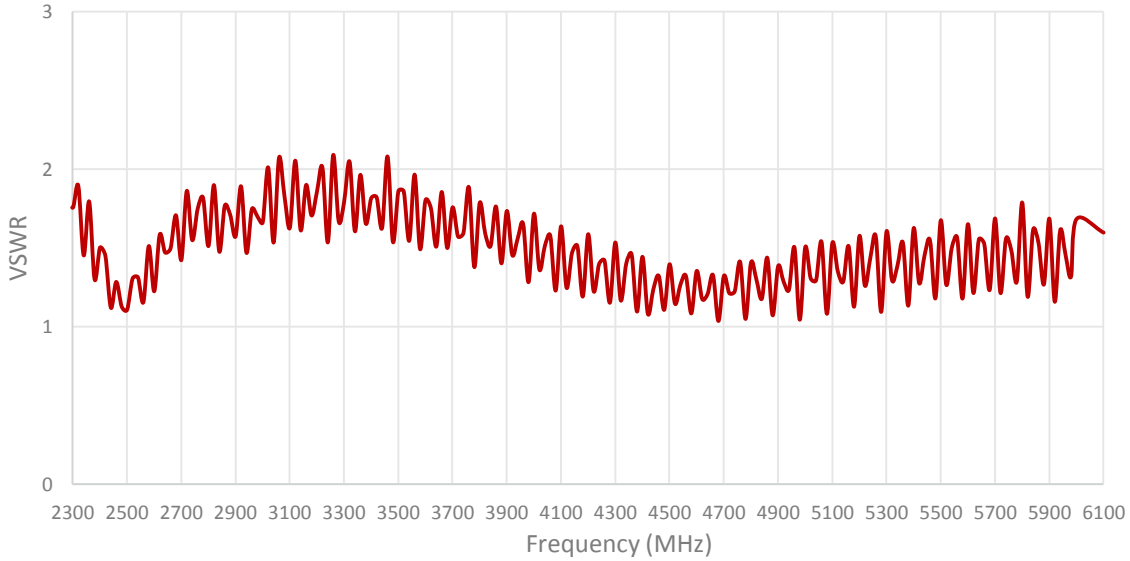

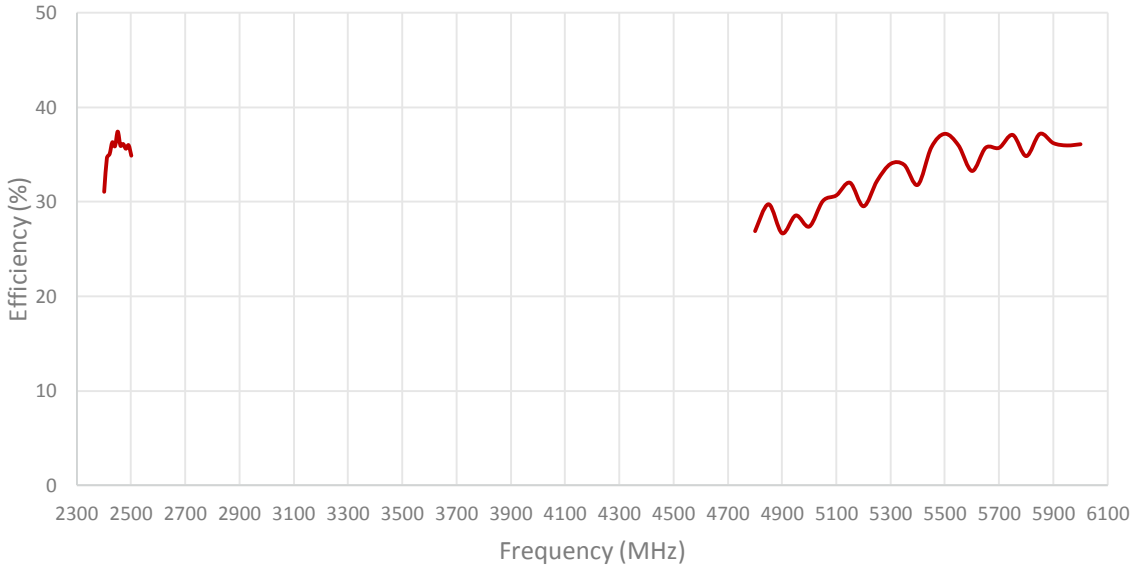
50
40
30
20
10
0
Efficiency (%)
2300 2500 2700 2900 3100 3300 3500 3700 3900 4100 4300 4500 4700 4900 5100 5300 5500 5700 5900 6100
Frequency (MHz)

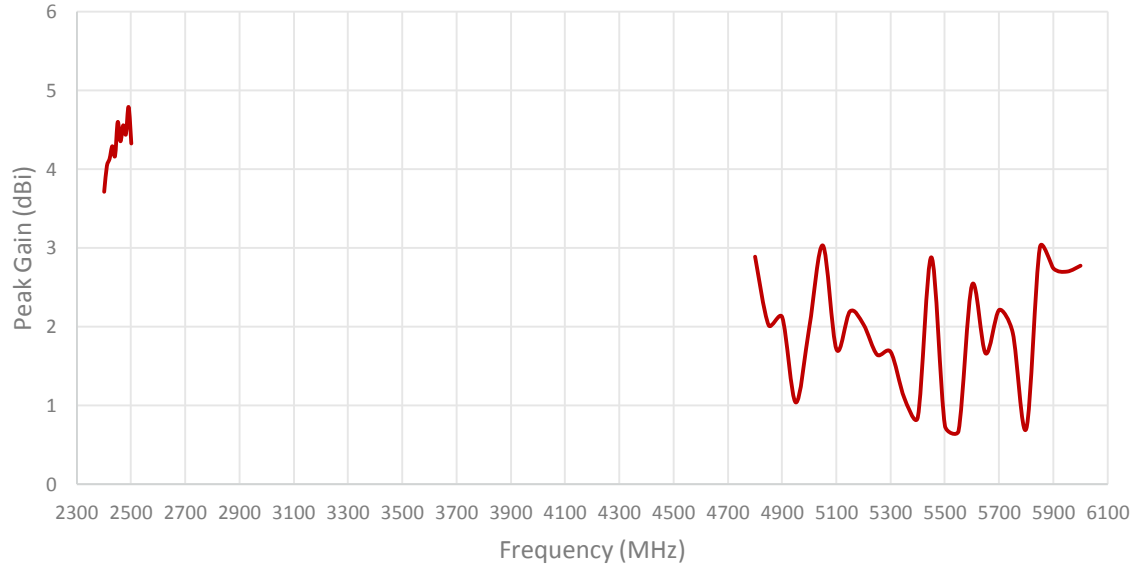
6
5
4
3
2
1
0
Peak Gain (dBi)
2300 2500 2700 2900 3100 3300 3500 3700 3900 4100 4300 4500 4700 4900 5100 5300 5500 5700 5900 6100
Frequency (MHz)

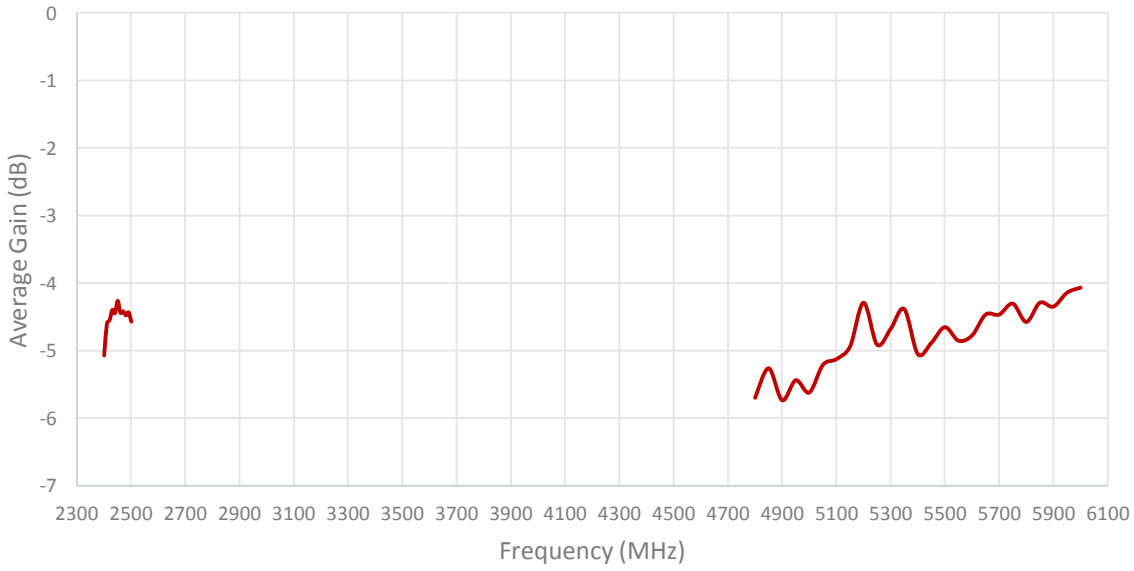

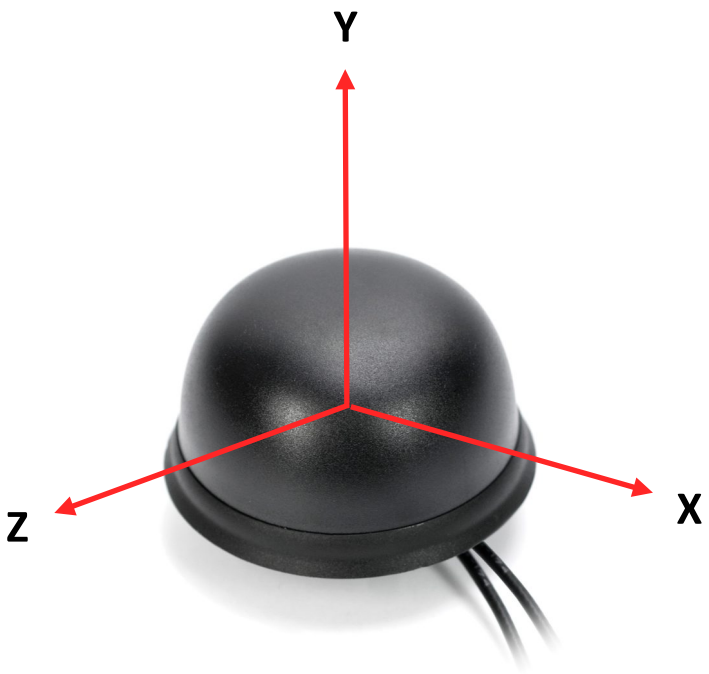

Radiation pattern reference

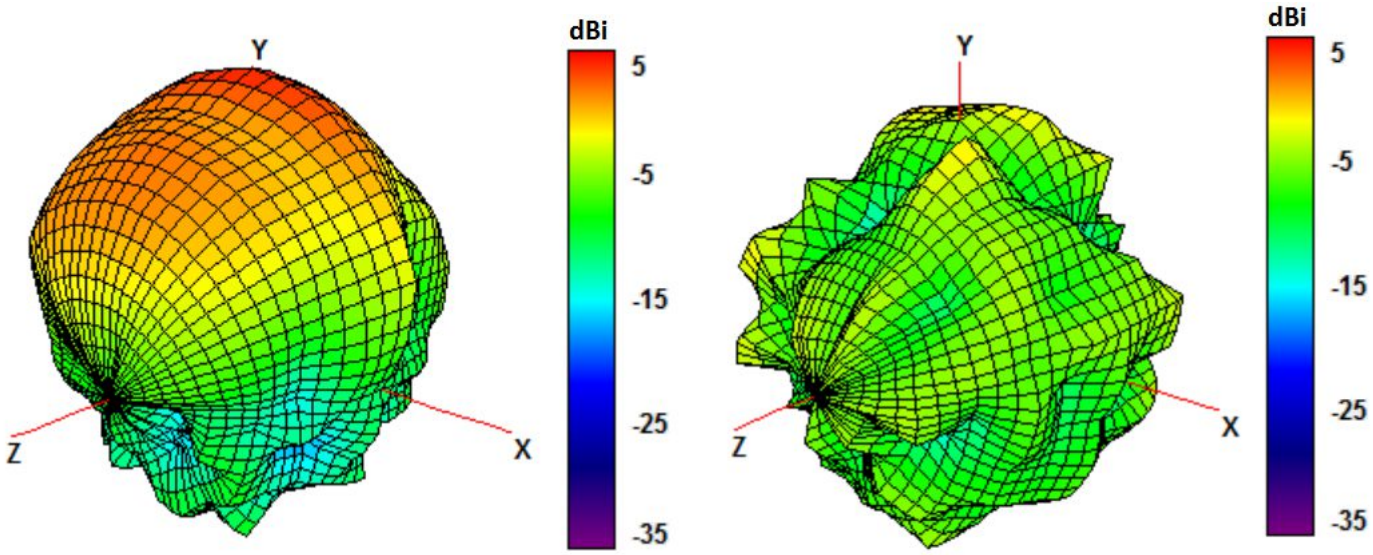

2450 and 5500 MHz Radiation pattern

4. Antenna drawings

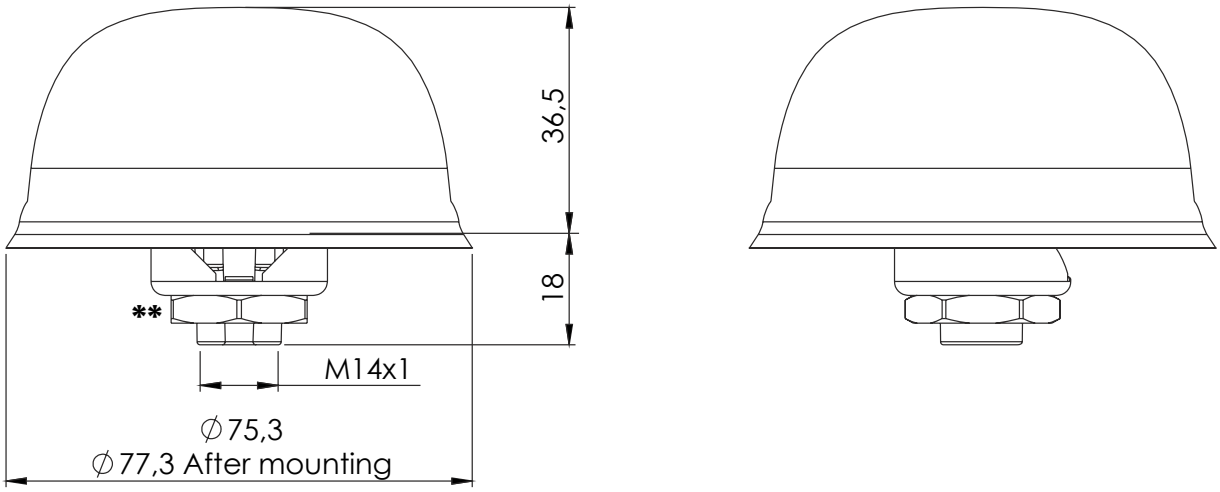

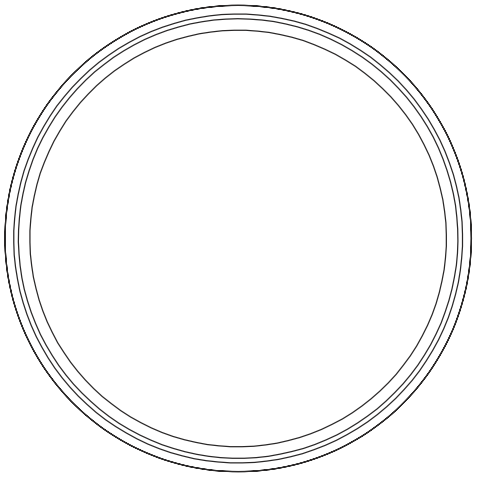

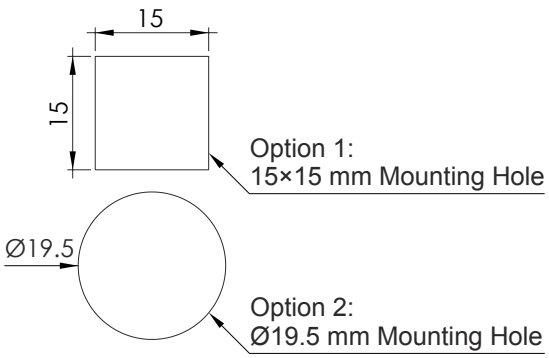

Note: Dimensions are in milimeters
***Dimensions are after mounting**
****Max. Torque= 6 Nm**

5. Antenna Images

