antenna conceptor

Product Datasheet

2J4D01MP

GNSS Magnetic/Adhesive Mount

Key Features

GPS/QZSS/Galileo
- 1575 MHz
Magnetic/Adhesive Mount
Ground Plane Independent
Customizable Cable and Connector
Dimensions 41 × 34 × 13.5/14.5 mm
Certificates: IP67



antenna conceptor

1. Antenna and electrical specifications

Parameters	GPS Antenna
Standard	GPS/QZSS/Galileo
Band (MHz)	1575
Frequency(MHz)	1575.42
Patch Size (mm)	25 × 25 × 4
Return Loss (dB)	~-25 dB
VSWR	~1.1:1
Impedance	50
Radiation Pattern	Hemispherical
Axial Ratio (dB)	3 Max.
Polarization	RHCP
Saw Filter	No Filter
Active Gain (dB)	26-28 @ 3-5 V
Noise Figure (dB)	1.2 @ 5V
Voltage (V)	2.7 - 5.5
Current (mA)	15-25
Power Consumption (mW)	40-138
Connector Type	SMA-Male Standard (Other Connectors Available)
Cable Length	300 cm Standard (Any Cable Length Available)
Cable Type	RG174 Standard (Other Cables Available)

2. Mechanical and environmental specifications

Specifications	2J4D01MP
Mounting Type	Magnetic/Adhesive Mount
Dimensions (mm)	41 x 34 x 13.5/14.5
Randome Type	ABS
Randome Color	Black
Antenna Base	ABS
Operating Temperature (C)	-40 to +85
Storage Temperature (C)	-40 to +85
Certificates	IP67
Substance Compliance	RoHS

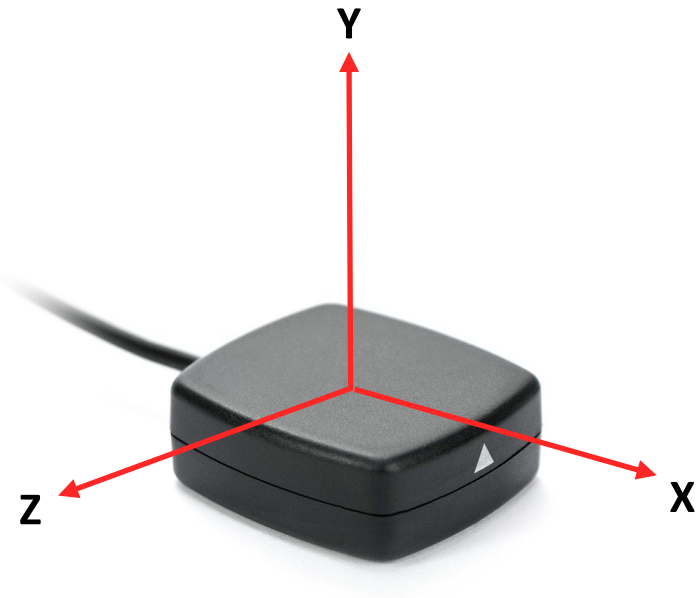

Radiation pattern reference

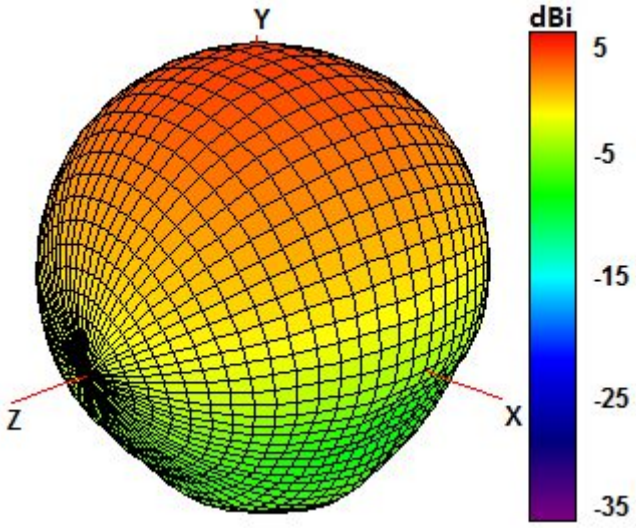

1575 MHz Radiation pattern

4. Antenna drawings

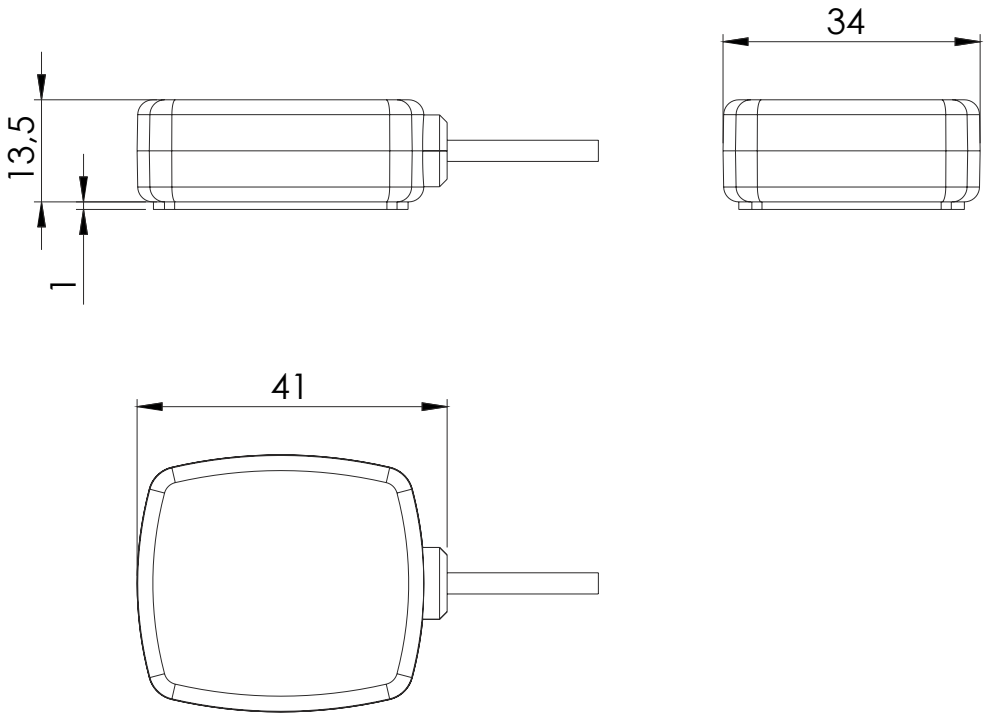

5. Antenna Images

