2JW0124a-B02M

(DATASHEET)

Type	Multiband antenna
Frequencies	4G/LTE (699-960/1710-2690 MHz) GALILEO E1 (1575.42 MHz) GPS (1575.42 MHz) GLONASS (1592 - 1610 MHz)
Mounting	Magnetic Mount
Revision	00



1. SPECIFICATION

1.1. Electrical Specifications

Frequencies	4G/LTE (699-960/1710-2690 MHz) GALILEO E1 (1575.42 MHz) GPS (1575.42 MHz) GLONASS (1592 - 1610 MHz)
Impedance	50 Ohms
Polarization	Linear
Gain	3dBi Ave.
VSWR	<2.5:1
Operating temperature	-40°C to +85°C

1.2. Connection Specifications

Connector: SMA male, Nickel
Cable: RG174U
Cable length: 150cm

For different cable or connector type please ask our sales team.

1.3. Mechanical Specifications and Dimensions

Material: ABS
Max. dimensions: 54mm x 219mm (D x H)
Weight: 115g
Colour: Black (for different colours please ask our sales team)

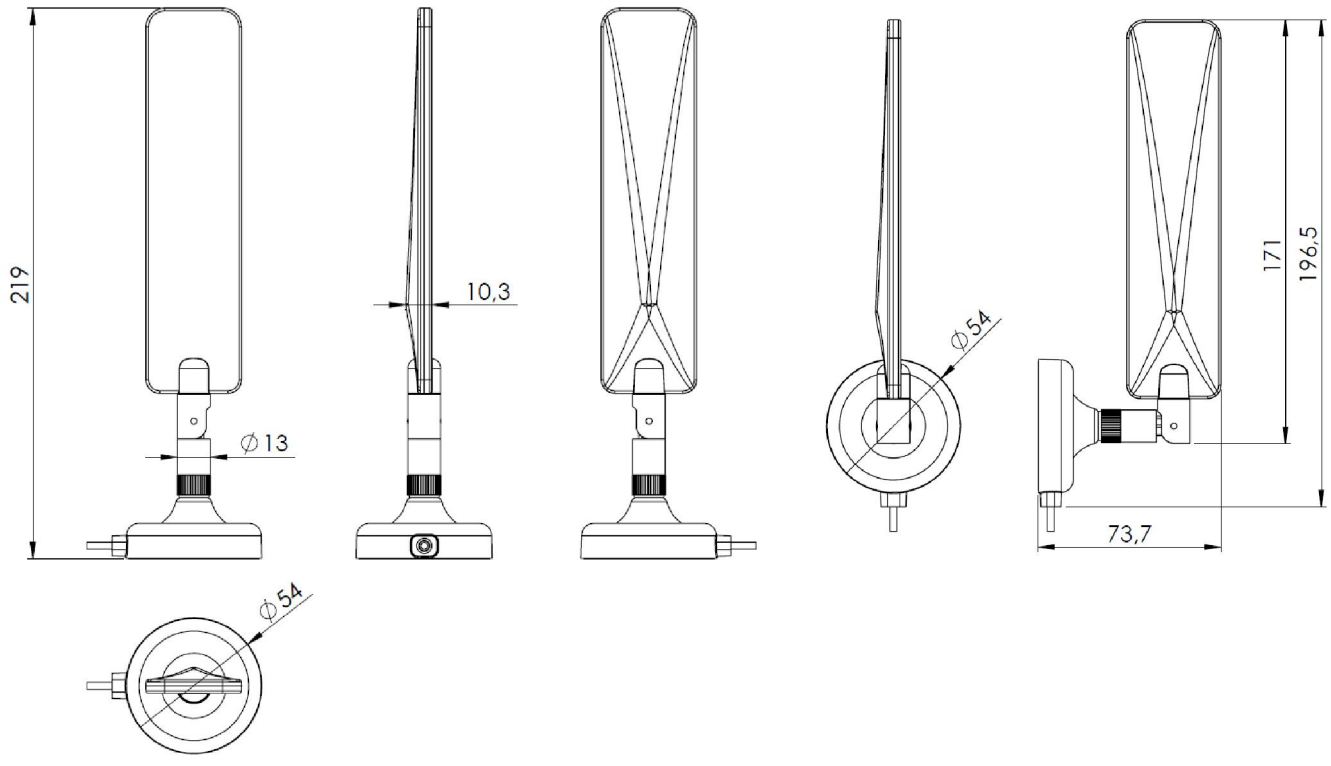

2. MEASUREMENT

Log Mag

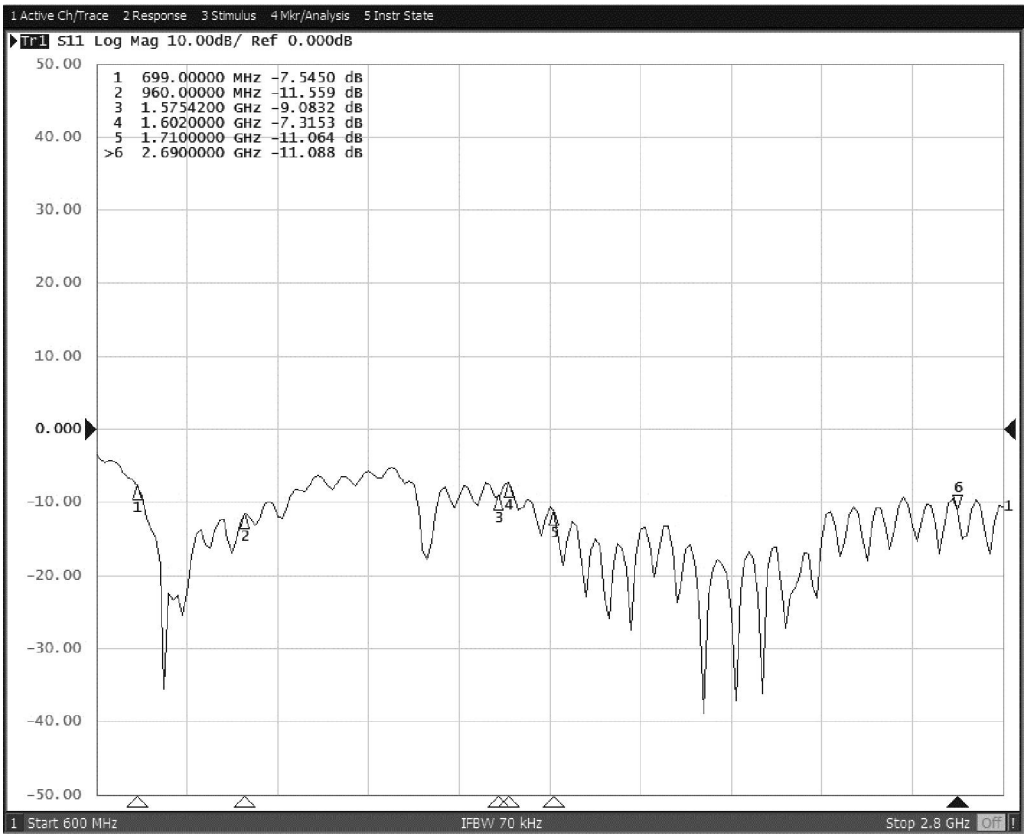

VSWR

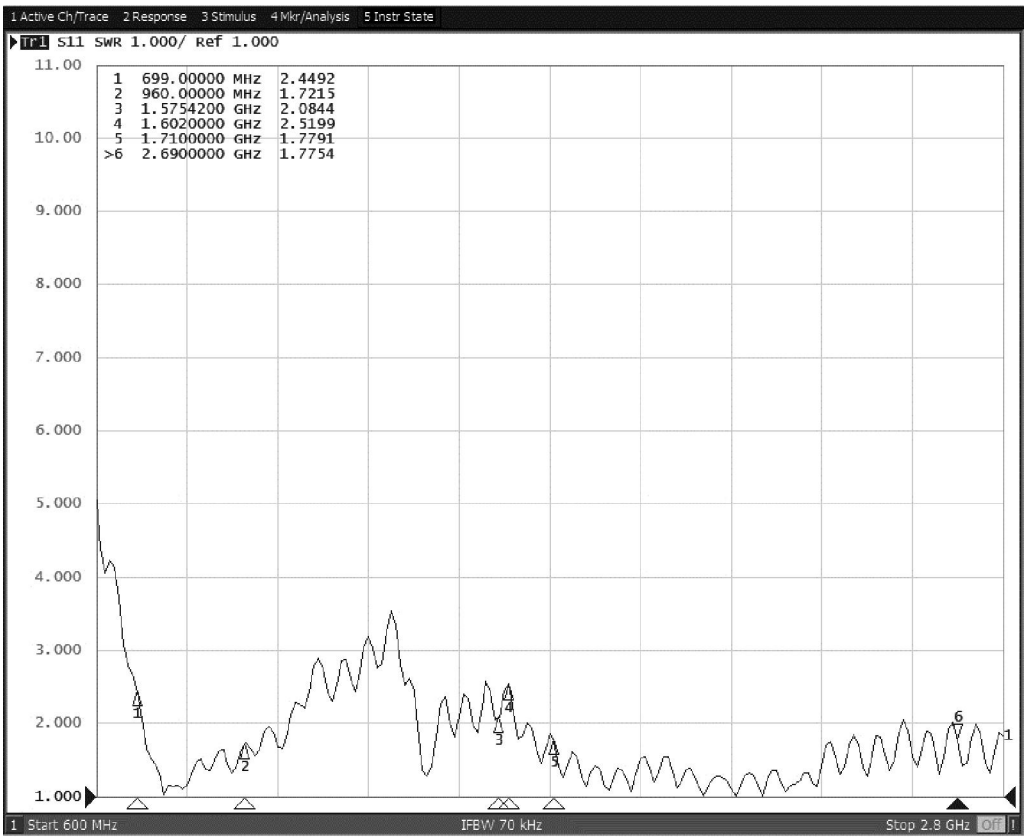

3. IMAGES

