antenna conceptor

Product Datasheet

2JF0102

2.4/5.0GHz ISM Flexible PCB

Key Features

2.4/5.0 GHz ISM
- 2410-2490 MHz
- 4920-5925 MHz

Embedded Antenna
High Performance
Ground Plane Independent
Self-Adhesive
Dimensions 39.6 × 8.4 × 0.1 mm
Customizable Cable and Connector

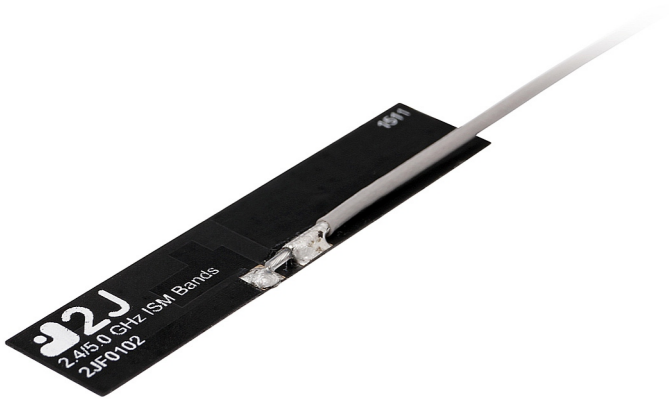

Description

2JF0102 antenna is flexible high efficiency embedded solution covering both 2.4 GHz and 5.0 GHz bands. Antenna can be easily mounted in most devices due to self-adhesive layer and small size. 2JF0102 is omnidirectional, ground plane independent antenna. Cable and connector is upon request.

antenna conceptor

1. Antenna and electrical specifications

Parameters	2.4/5.0 GHz ISM Antenna	
Standards	WLAN, WiFi, BT, ZigBee, ISM, DSRC	
Band (MHz)	2.4 GHz	5.0 GHz
Frequency (MHz)	2410-2490	4920-5925
Return Loss (dB)	~-20.8	~-15.5
VSWR	~1.2:1	~1.4:1
Efficiency (%)	~76	~82
Peak Gain (dBi)	~2.2	~3.8
Average Gain (dB)	~-1.2	~-0.8
Impendance (Ohm)	50	
Polarisation	Linear	
Radiation Pattern	Omni-Directional	
Max. Input Power (W)	25	
Connector Type	Most RF Connectors (U.FL Standard)	
Cable Length	Any Cable Length (100mm Standard)	
Cable Type	Other Cables Available (1.13mm Standard)	

Antenna Measurement Conditions:

Mounted 10x10x0.25 cm Plastic Plate

Measured in Certified CTIA 3D Anechoic Chamber

2. Mechanical and environmental specifications

Specifications	2JF0102
Mounting Type	Self-Adhesive
Dimensions (mm)	39.6x 8.4 x 0.1
Adhesive Type	3M 467
Material	Flexible PCB
Operating Temperature (C)	-40 to +85
Storage Temperature (C)	-40 to +85
Substance Compliance	RoHS

3. Antenna parameters

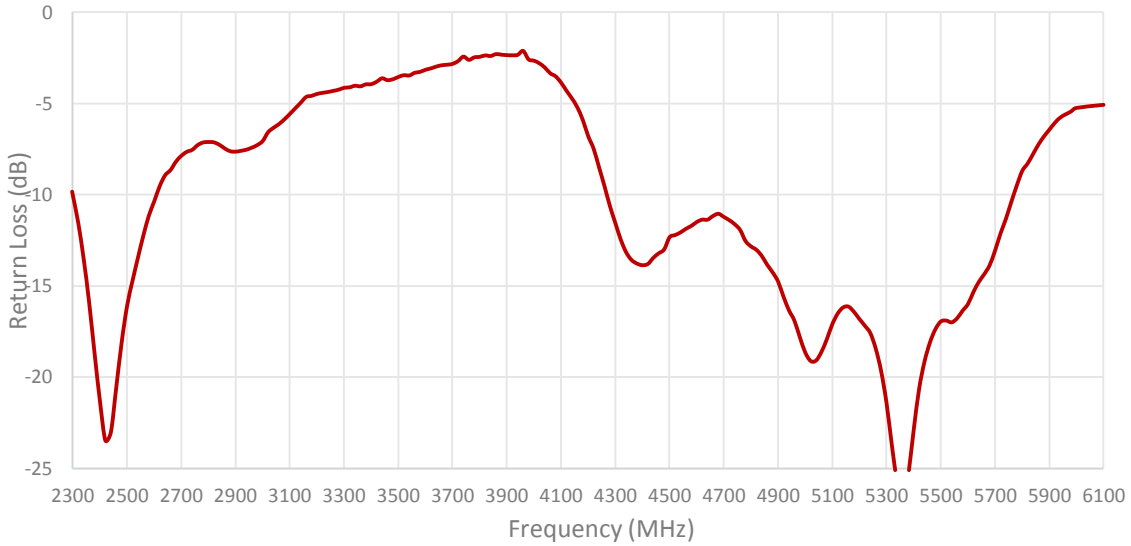

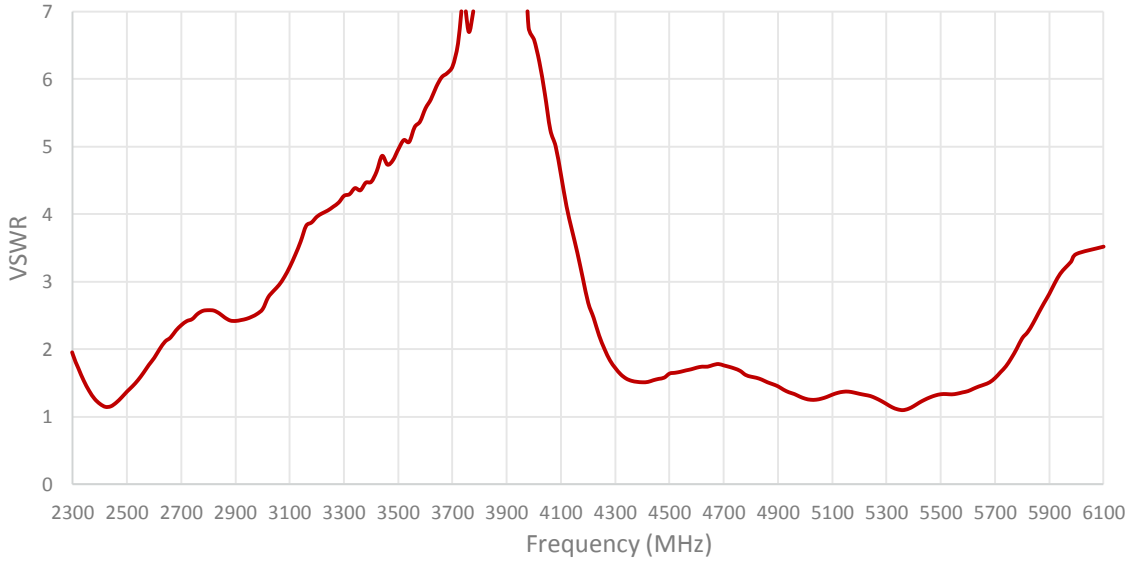

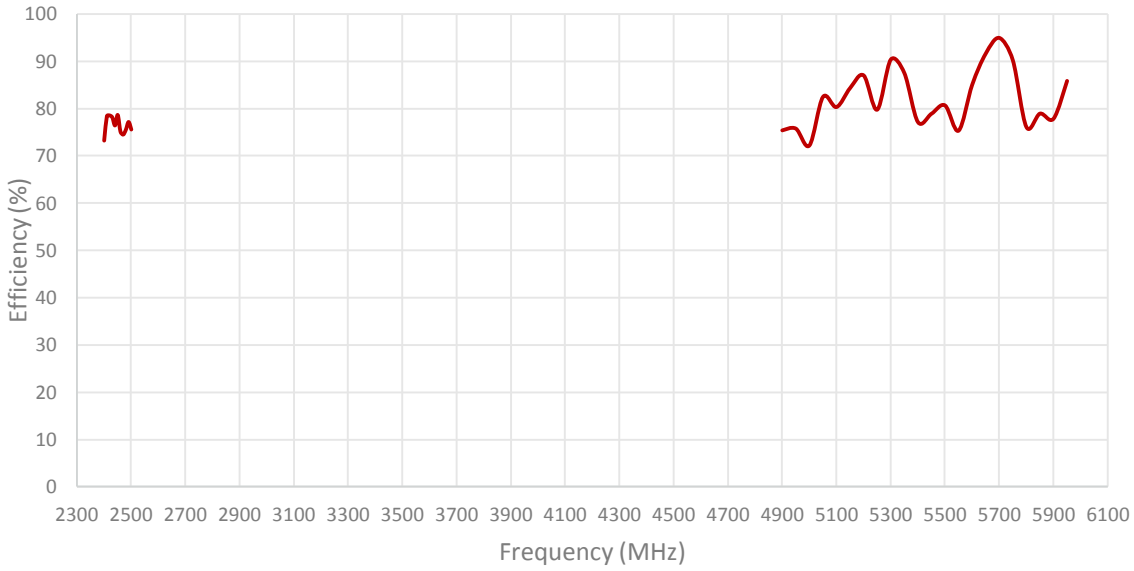
100
90
80
70
60
50
40
30
20
10
0
Efficiency (%)
2300 2500 2700 2900 3100 3300 3500 3700 3900 4100 4300 4500 4700 4900 5100 5300 5500 5700 5900 6100
Frequency (MHz)

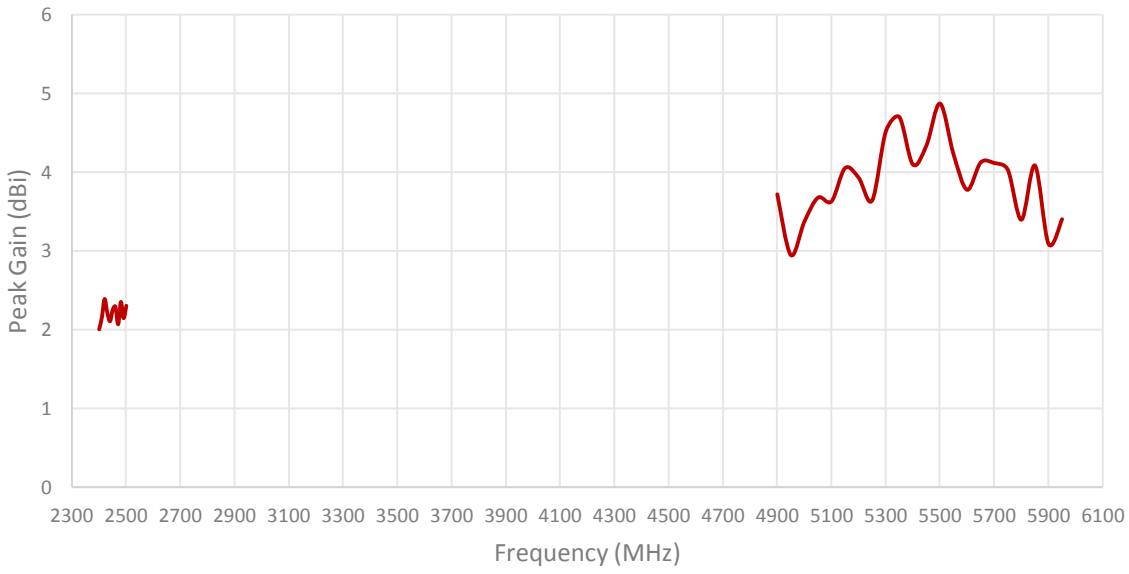
6
5
4
3
2
1
0
Peak Gain (dBi)
2300 2500 2700 2900 3100 3300 3500 3700 3900 4100 4300 4500 4700 4900 5100 5300 5500 5700 5900 6100
Frequency (MHz)

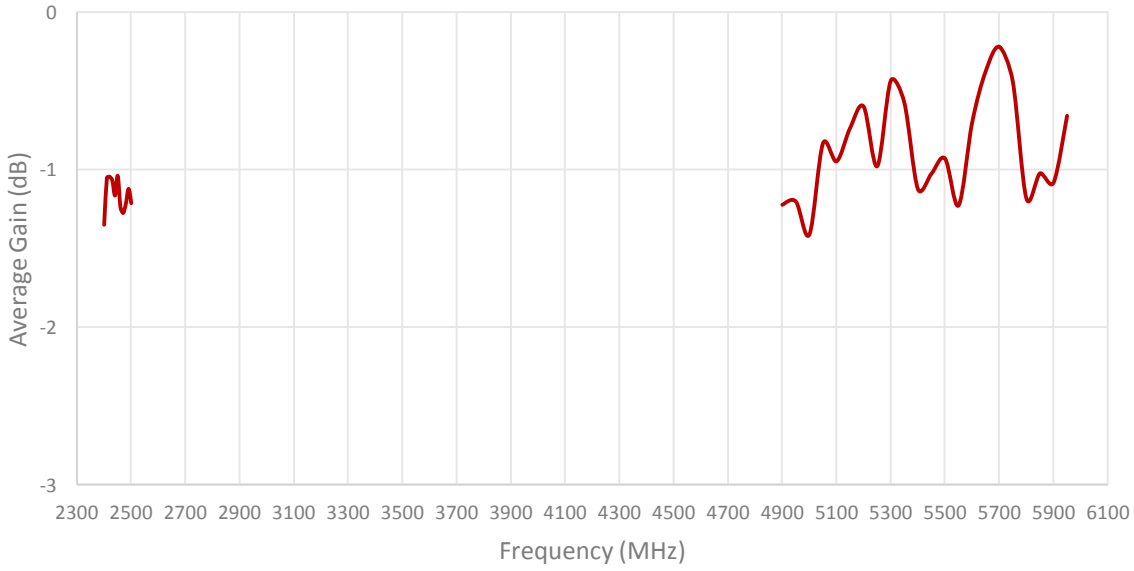

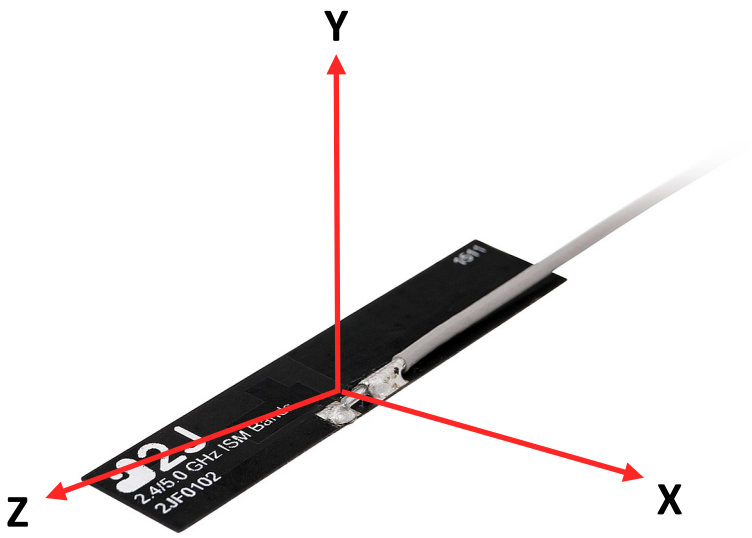

Radiation pattern reference

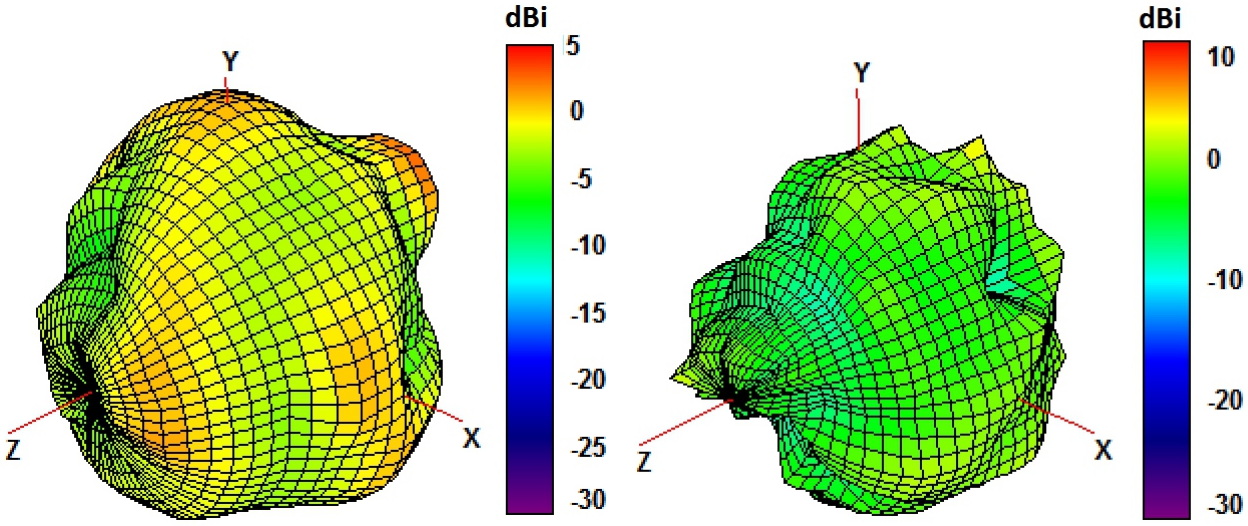

2450 and 5500 MHz Radiation pattern

4. Antenna drawings

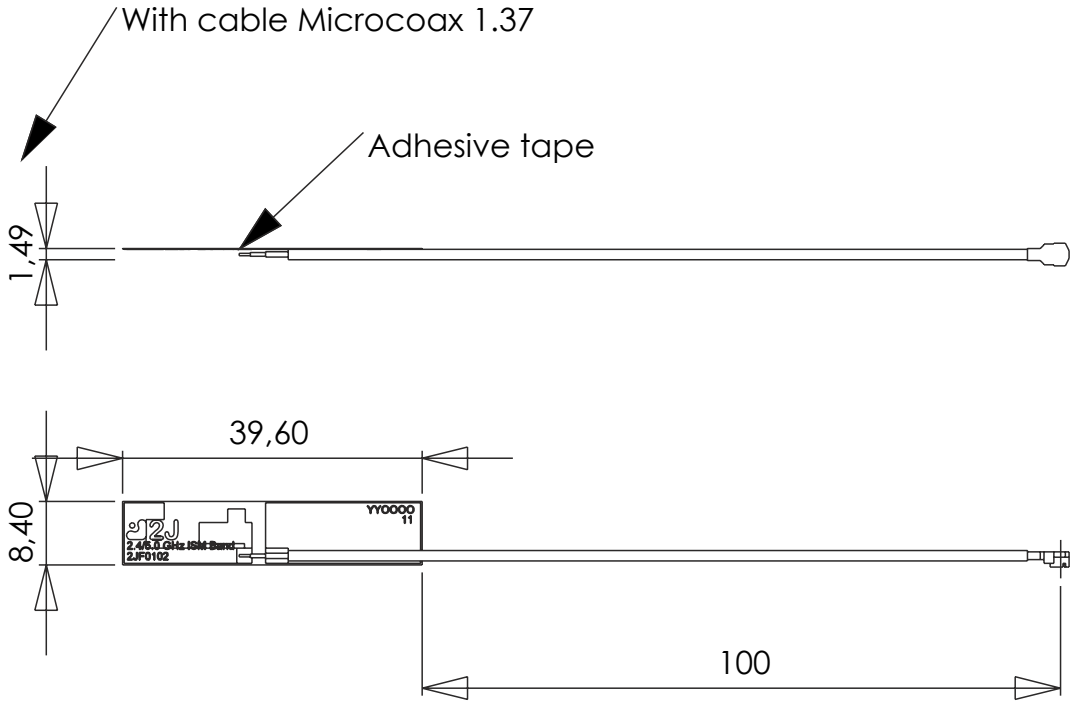

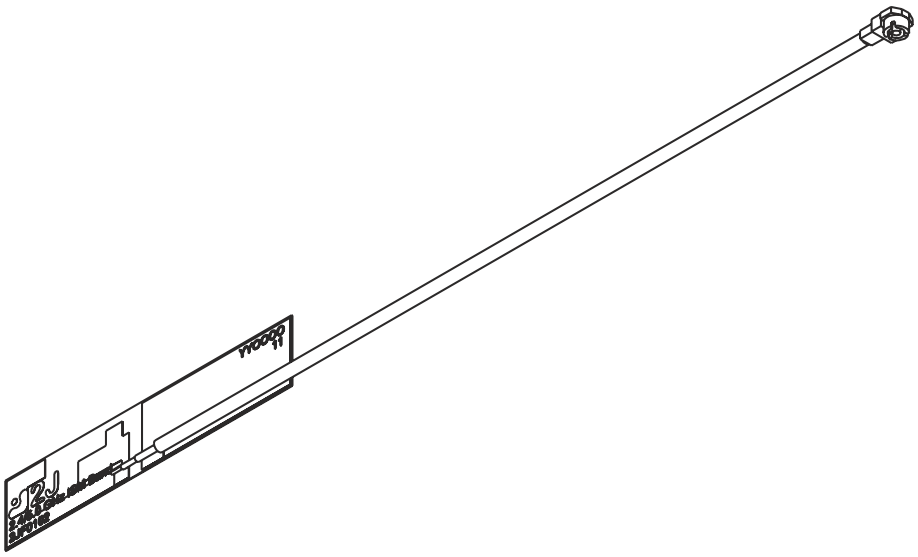

5. Antenna Images



