antenna conceptor

Product Datasheet

2J7524B

CELLULAR / LTE Screw Mount



Key Features

CELLULAR / LTE
- 698-960 MHz
- 1710-2170 MHz
- 2500-2700 MHz

Screw Mount
High Performance
Ground Plane Dependent
Customizable Cable and Connector
Dimensions ø 60 x 81 mm
Certificates IP67, IP69K

1. Antenna and electrical specifications

Parameters	CELLULAR / LTE Antenna		
Standards	2G,3G and 4G		
Band (MHz)	700/850/900	1700/1800/1900/2100	2600
Frequency (MHz)	698-960	1710-2170	2500-2700
Return Loss (dB)	~-12.4	~-21.0	~-14.8
VSWR	~1.9:1	~1.2:1	~1.5:1
Efficiency (%)	~54.7	~59.5	~49.4
Peak Gain (dBi)	~1.5	~2.9	~2.7
Average Gain (dB)	~-2.7	~-2.3	~-3.1
Impendance (Ohm)	50		
Polarisation	Linear		
Radiation Pattern	Omni-Directional		
Max. Input Power (W)	25		
Connector Type	SMA-Male Standard (Other Connectors Available)		
Cable Length	300 cm Standard (Any Cable Length Available)		
Cable Type	D302 Standard (Other Cables Available)		

Antenna Measurement Conditions:

Mounted on 30 x 30 cm Metal Plate

200 cm of D302

Measured in Certified CTIA 3D Anechoic Chamber

2. Mechanical and environmental specifications

Specifications	2J7524B
Mounting Type	Screw Mount
Dimensions (mm)	Ø 60 × 81
Max. Tighten Torque (Nm)	6 Nm
Radome	ASA
Radome color	Black
Antenna Base	Zamak
Gasket	TPE
Operating Temperature (C)	-40 to +85
Storage Temperature (C)	-40 to +85
Substance Compliance	RoHS
Certificates	IP67, IP69K

3. Antenna parameters

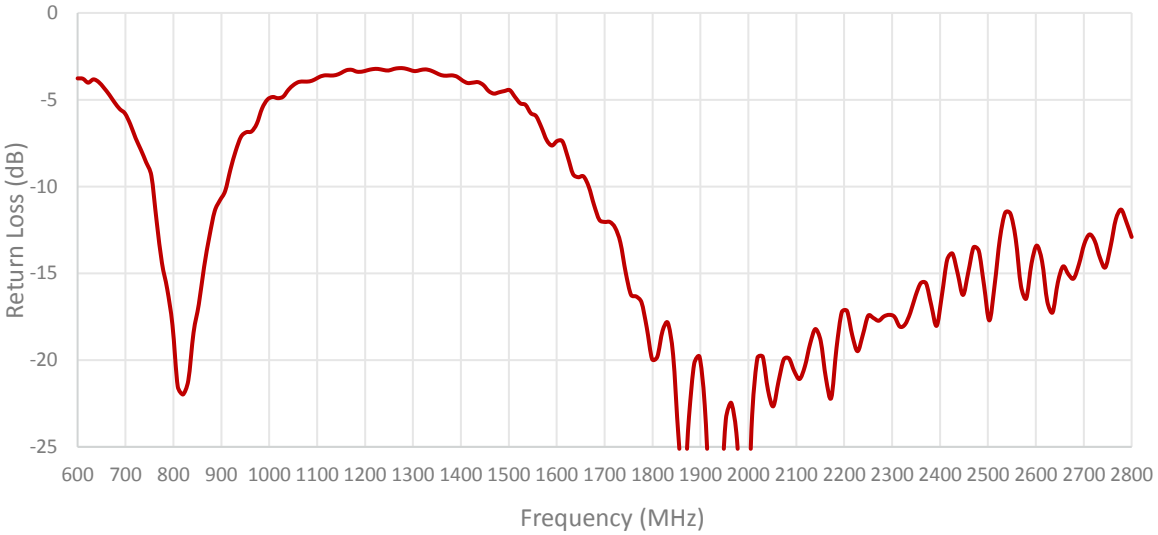

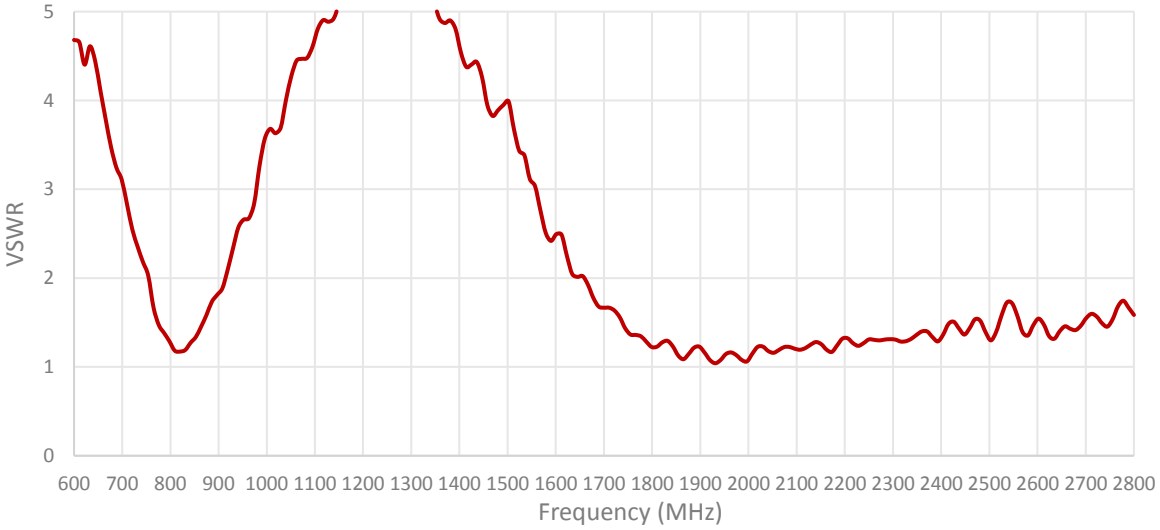

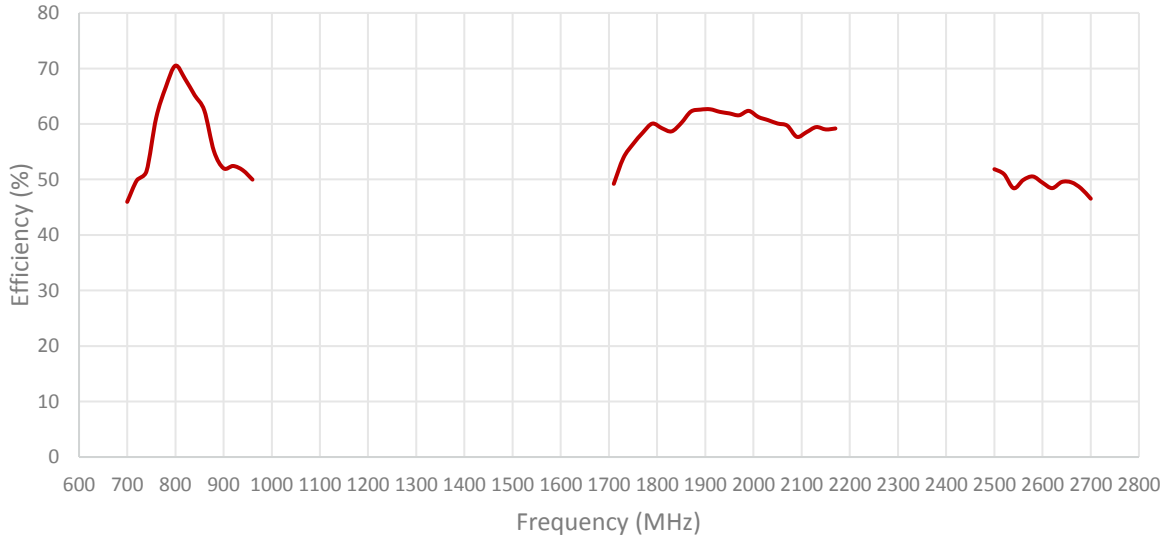
80
70
60
50
40
30
20
10
0
Efficiency (%)
600 700 800 900 1000 1100 1200 1300 1400 1500 1600 1700 1800 1900 2000 2100 2200 2300 2400 2500 2600 2700 2800
Frequency (MHz)

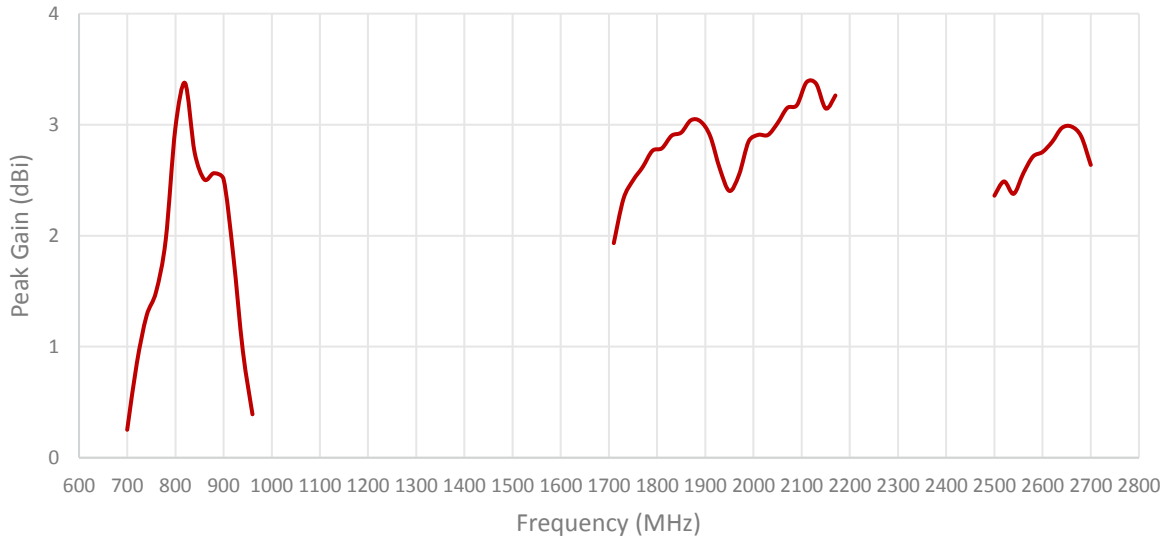
4
3
2
1
0
Peak Gain (dBi)
600 700 800 900 1000 1100 1200 1300 1400 1500 1600 1700 1800 1900 2000 2100 2200 2300 2400 2500 2600 2700 2800
Frequency (MHz)

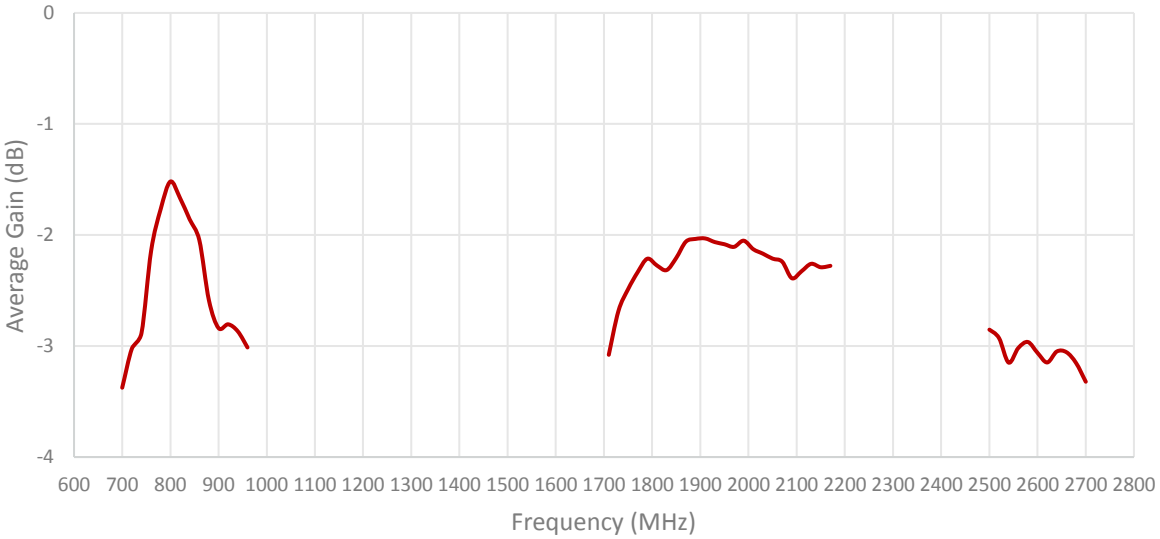

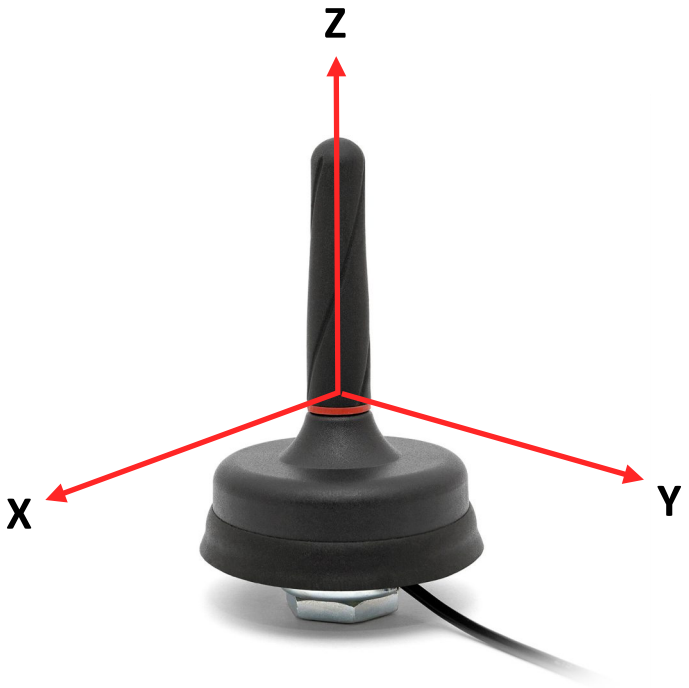

Radiation pattern reference

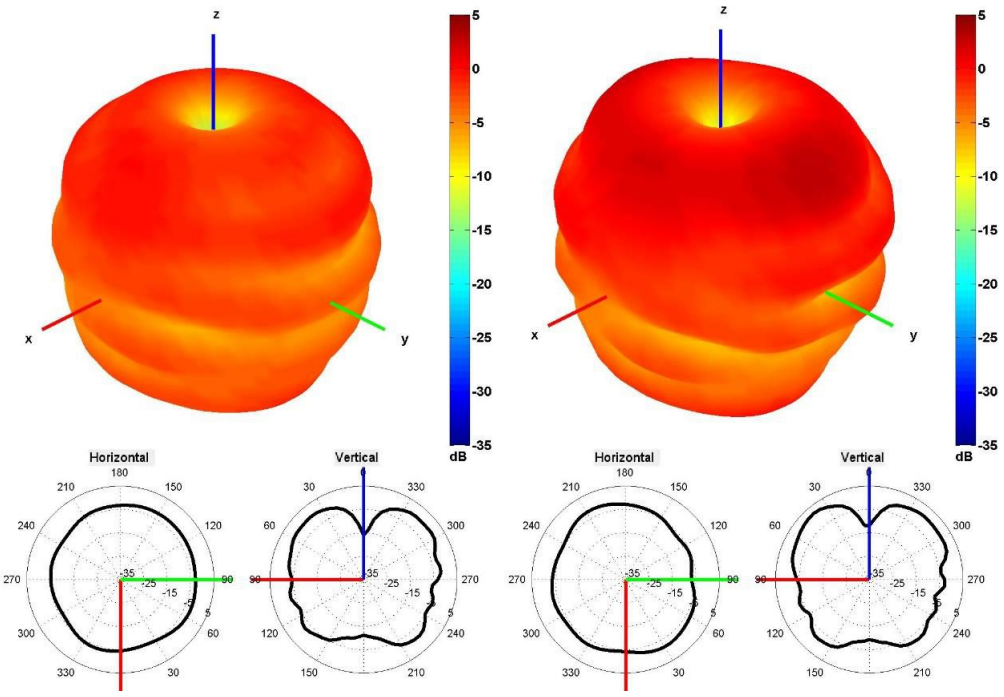

750 and 850 MHz Radiation pattern

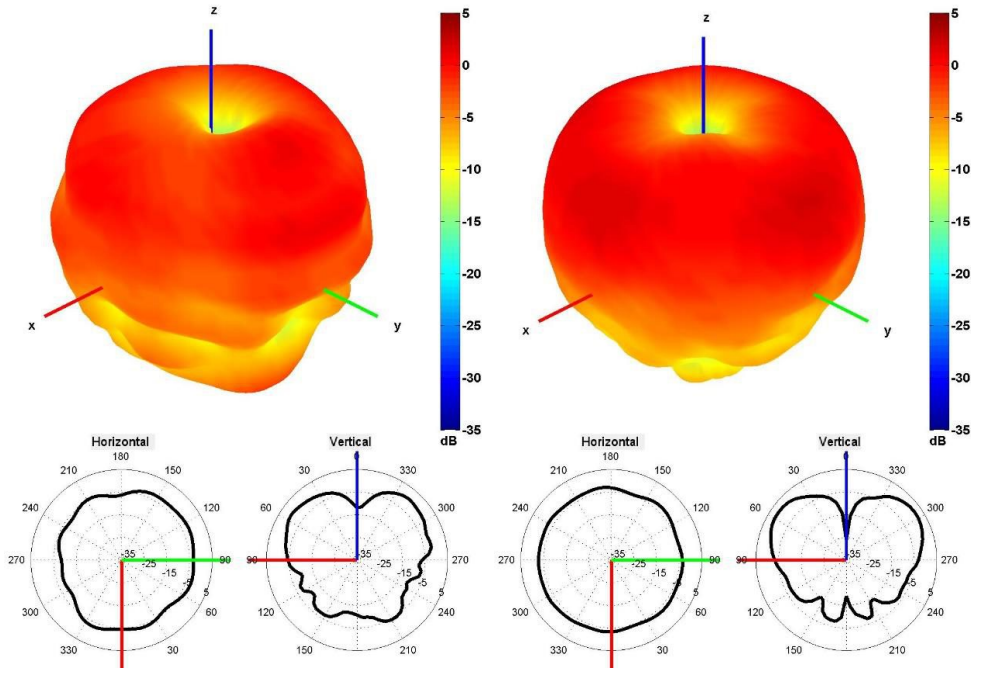

940 and 1750 MHz Radiation pattern

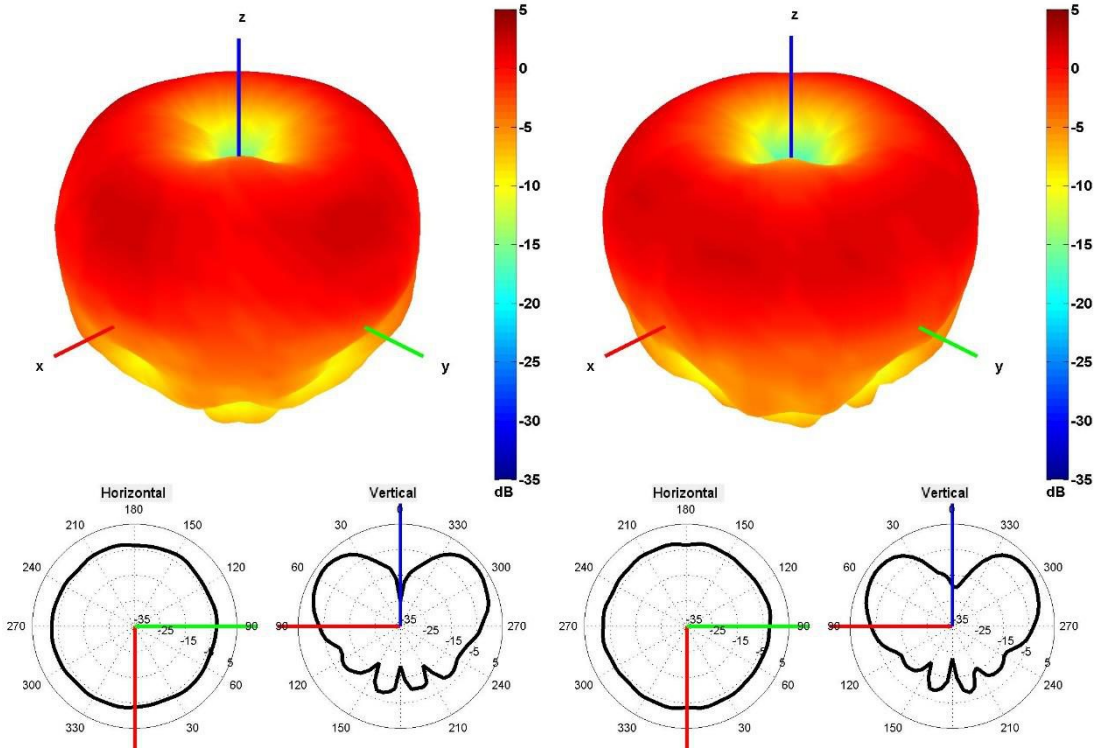

1850 and 1950 MHz Radiation pattern

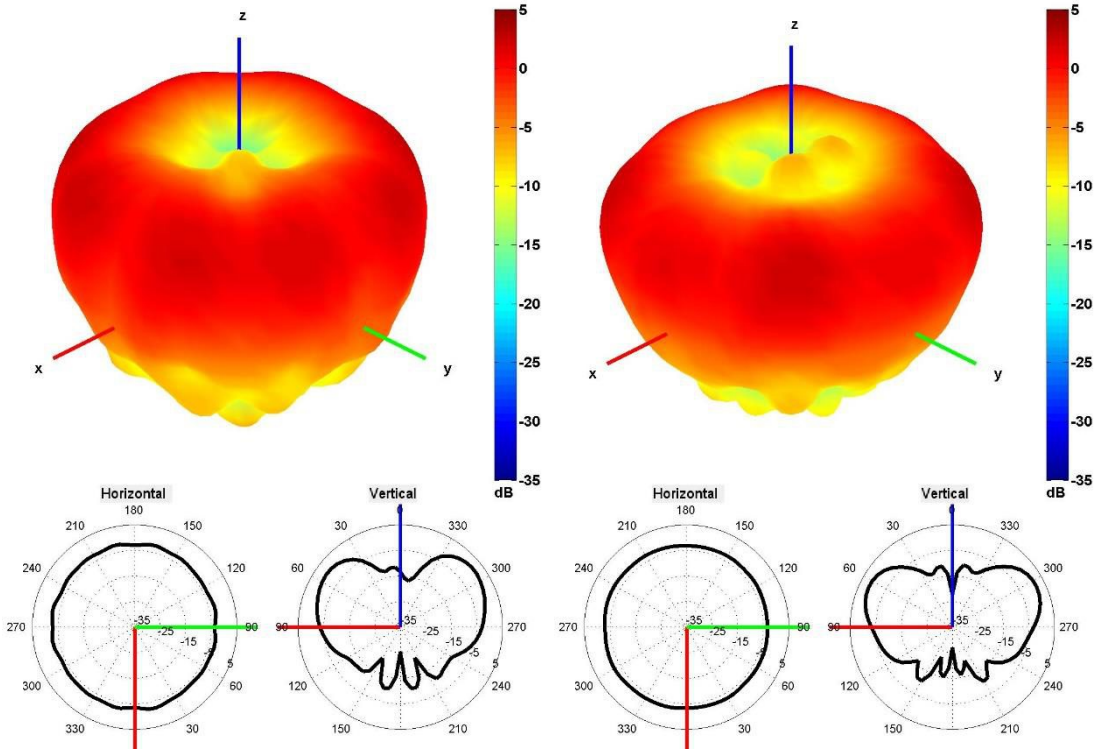

2100 and 2600 MHz Radiation pattern

4. Antenna drawings

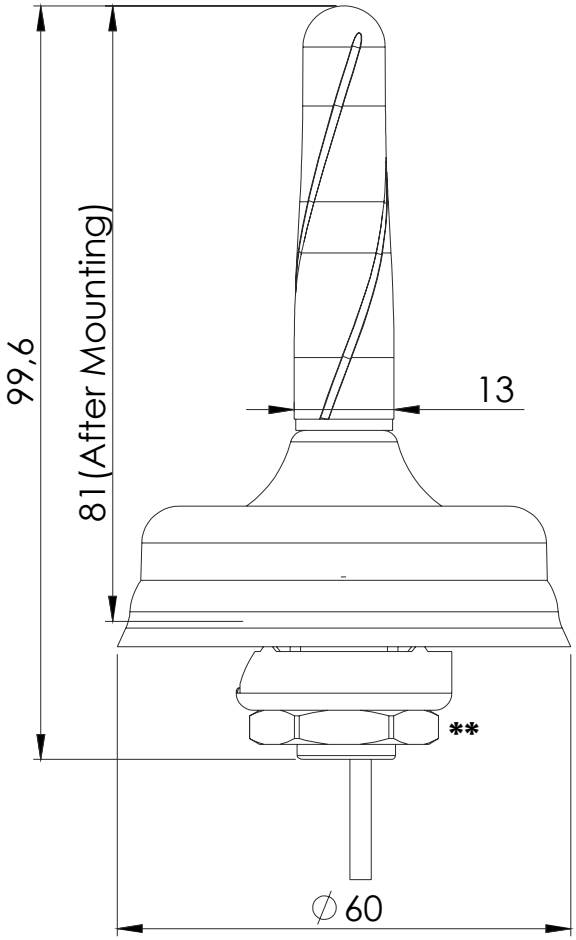

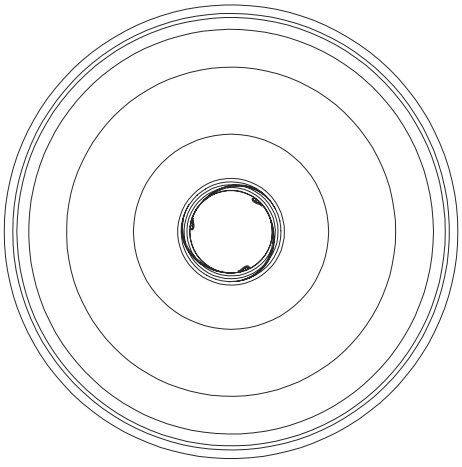

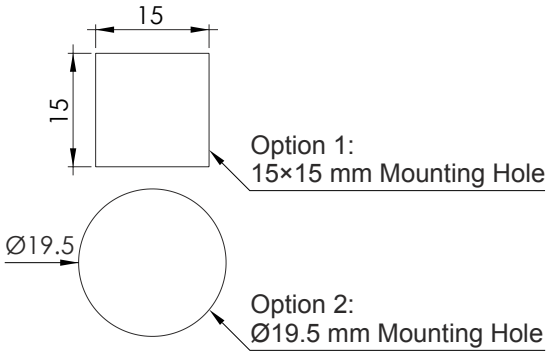

Note: Dimensions are in milimeters
***Dimensions are after mounting**
****Max. Torque= 6 Nm**

5. Antenna Images





