2J0A02-5GHz-C91G

(DATASHEET)

Type	WiFi antenna
Frequencies	WIFI (4.85 - 5.85 GHz)
Mounting	Telematic
Revision	00



D. Noble

1. SPECIFICATION

1.1. Electrical Specifications

Frequencies	WIFI (4.85 – 5.85 GHz)
Impedance	50 Ohms
Polarization	Linear
Gain	< 5dBi max.
VSWR	<3:1
Operating temperature	-40°C to +85°C

1.2. Connection Specifications

Connector type: SMA male, gold

1.3. Mechanical Specifications and Dimensions

Max. dimensions: 44mm x 9.6mm (H x D)
Weight: 6g
Colour: Black (for different colours please ask our sales team)

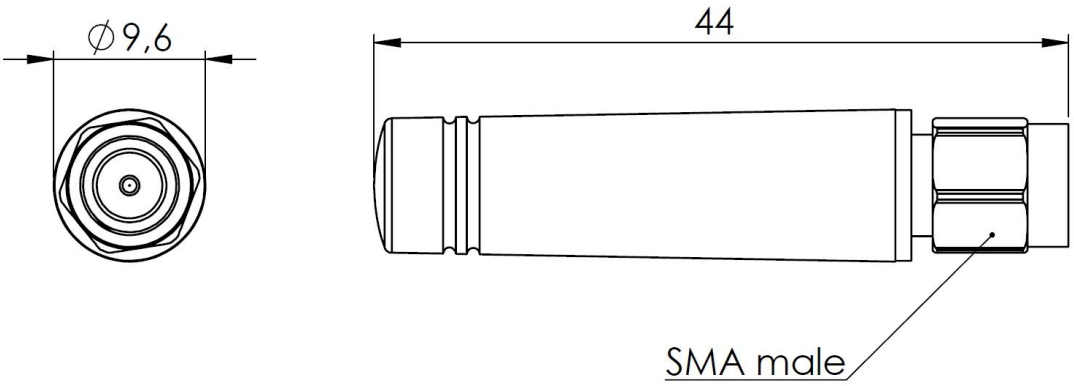

2. MEASUREMENT

Measured directly on analyzer N9923A

VSWR

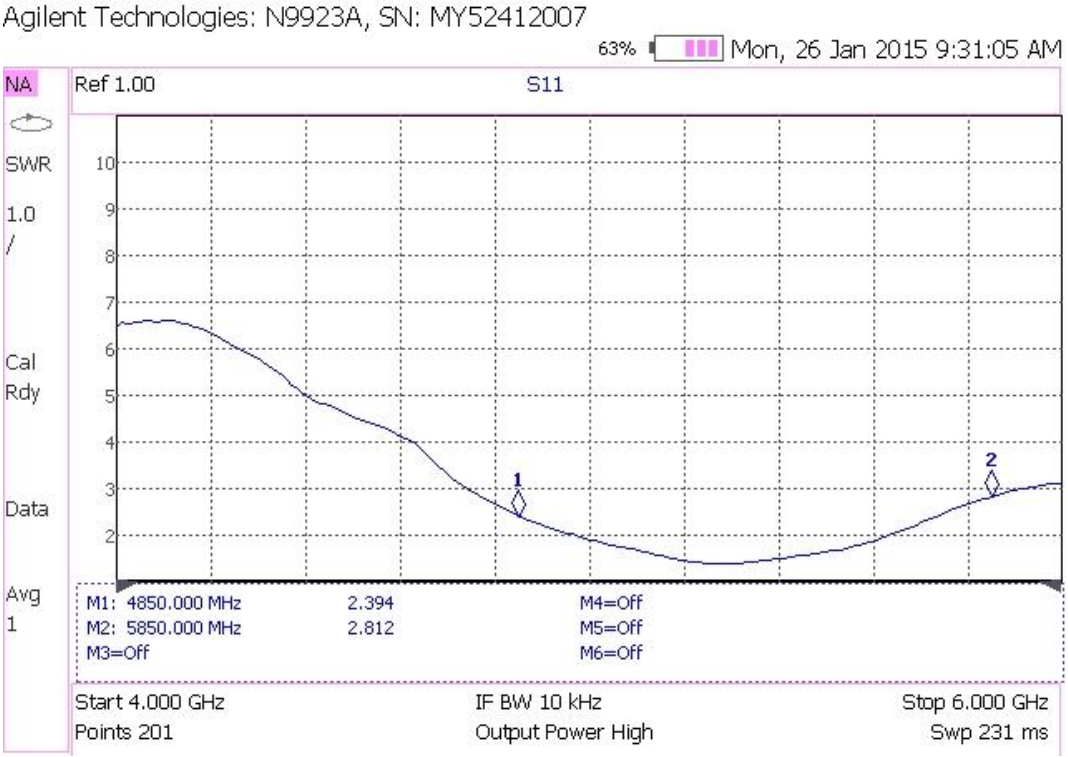

LOG MAG

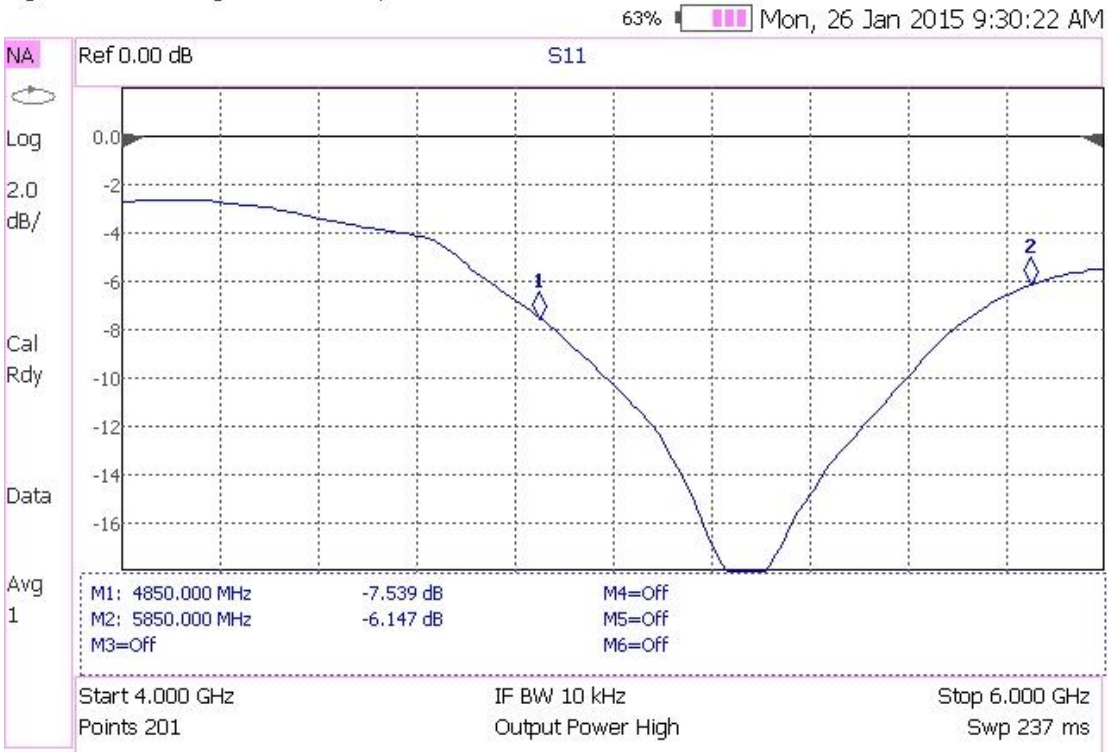

3. PICTURES





